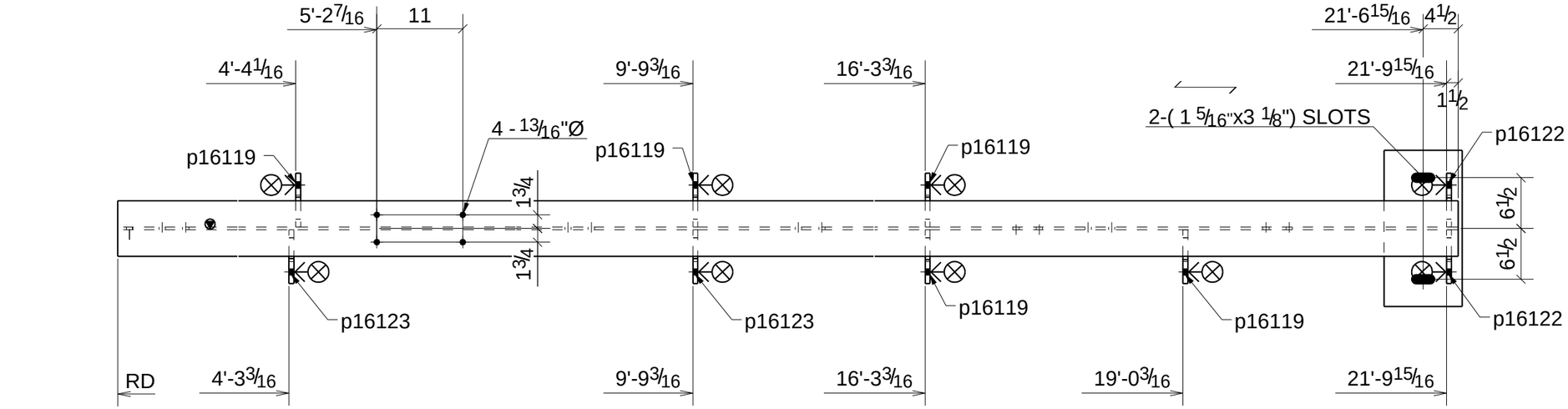

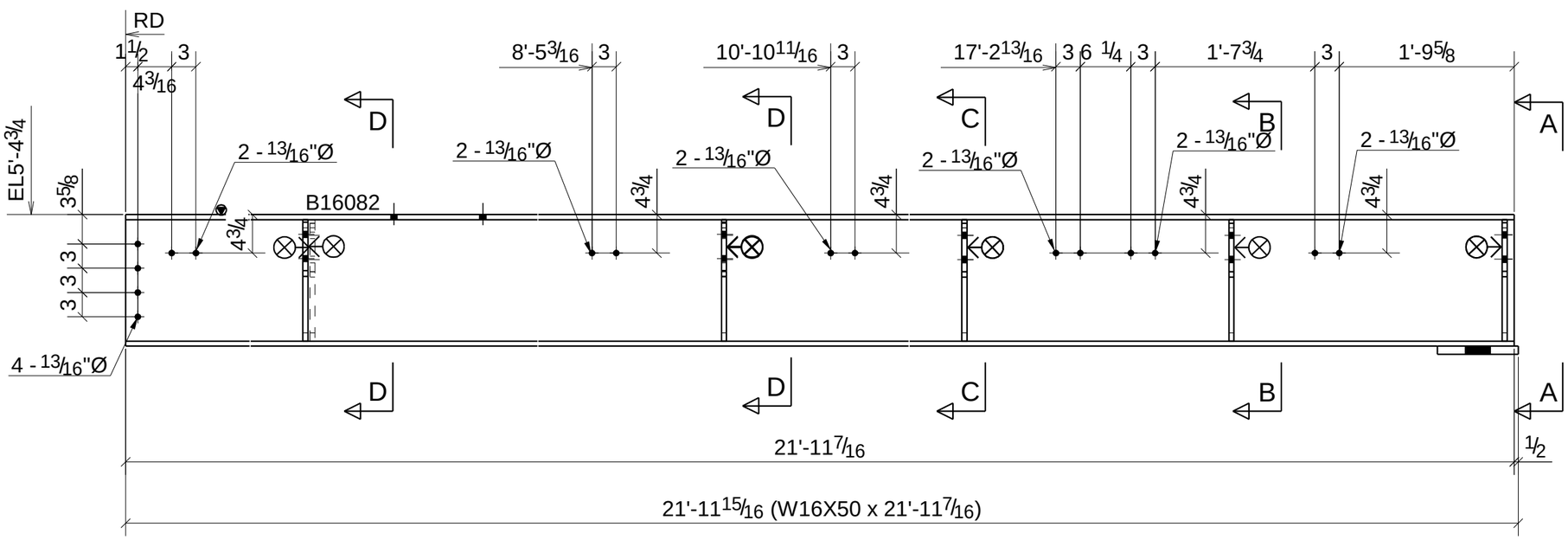

BILL OF MATERIAL

ABM MARK	MARK	QTY	MATERIAL	LENGTH FT. IN.	TOTAL WEIGHT	GRADE	REMARKS
	B16082	1	W16X50	21'-11 7/16"	1098	A992	
	p16119	5	PL5/8"X6 7/8"	1'-3"	62.7	A36	
	p16122	2	PL5/8"X6 7/8"	1'-3"	25.1	A36	
	p16123	2	PL5/8"X6 7/8"	1'-3"	25.1	A36	
	p16133	1	PL1"X10"	1'-8"	56.7	A36	
			TOTAL WEIGHT		1268		
B16082	BOLT QTY'S ARE FOR ONE ASSEMBLY ONLY						
		4	3/4" Ø BOLT	0'-2 1/4"		A325N	Site

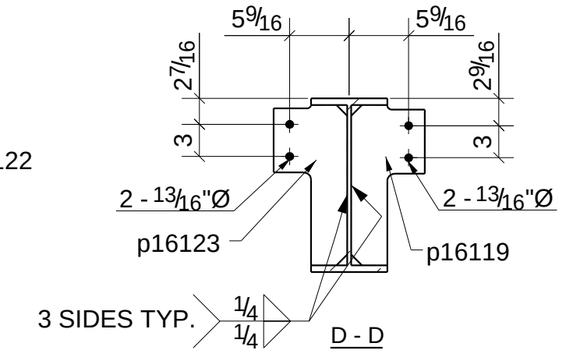

D - D

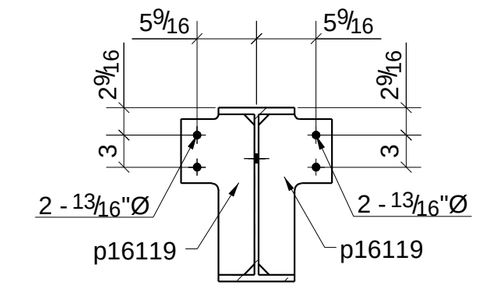

C - C

GENERAL NOTES:

1) ALL MATERIAL = A36 (UN)
2) ALL HSS MATERIAL = A500-B (UN)
3) DEBURR ALL HOLES
4) NO PAINT 3" AROUND OPEN HOLES MARKED "SC"

PRINT			RECORD		
DATE	NO. PRTS	FOR	DATE	NO. PRTS	FOR

NO.	DATE	REVISION

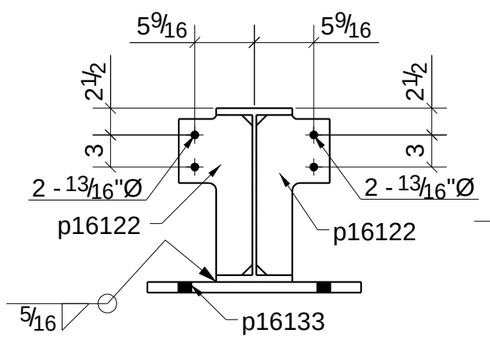

A - A

ONE BEAM REQ'D AS DRAWN MK B16082

GRID LOCATION
2>/A-B

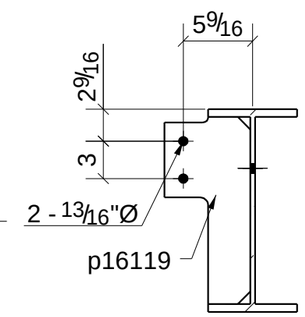

B - B

E-DWG. REF.: E16002

BOLTS: 3/4" DIA. A325N

OPEN HOLES: 13/16" DIA.

PAINT: PS1

CLEAN: PS1

UNLESS NOTED